PAW GmbH & Co. KG
Böcklerstraße 11, 31789 Hameln Germany
Phone: +49-5151-9856-0, Fax: +49-5151-9856-98
E-mail: info@paw.eu, Web: www.paw.eu

English

Installation and Operation Instructions HeatBloC® K35 - DN 25 with 3-temperature mixing valve

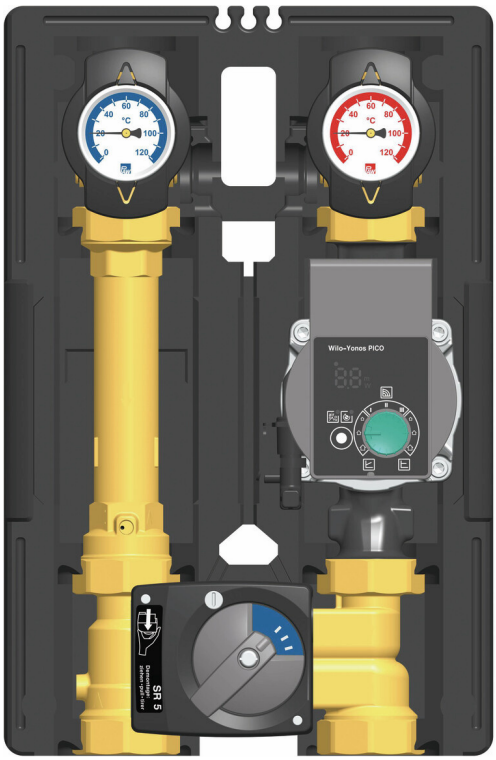



Table of Contents

1	General Information	3
1.1	Scope of these instructions	3
1.2	Designated use	3
2	Safety instructions	4
3	Product description	5
3.1	Equipment	5
3.2	Function	6
3.2.1	3-temperature mixing valve [specialist]	7
3.2.2	Change of the flow line [specialist]	8
3.2.3	Check valve and non-return valve [specialist]	11
4	Mounting and installation [specialist]	12
4.1	Installation of the HeatBloC®	12
4.2	Accessories: Actuator (optional)	14
5	Scope of delivery [specialist]	15
6	Technical data	17
6.1	Pressure drop and pump characteristic curves	18
7	Disposal	19

1 General Information



Carefully read these instructions before installation and commissioning.

Save these instructions in the vicinity of the installation for future reference.

1.1 Scope of these instructions

These instructions describe the installation, commissioning, functioning and the operation of a mixed HeatBloC®.

For other components of the installation, such as the pump, the controller or the distribution manifold, please refer to the instructions of the corresponding manufacturer. The chapters marked with [specialist] are intended for specialists only.

Product	Item number	Nominal diameter	Pump	Actuator
HeatBloC® K35	36093	DN 25	-	-
	36093M		-	SR5
	36093MWP6		Wilo Para SC 25/6-43	
	36093MWN06		Wilo Yonos PICO 25/1-6	
	36093MGM6		Grundfos UPM3 Auto 25-70	
	36093MGH6		Grundfos Alpha2.1 25-60	

1.2 Designated use

The product may only be used in heating circuits taking into consideration the technical limit values indicated in these instructions.

It must **not** be used in drinking water applications.

Improper usage excludes any liability claims.

This product complies with the relevant directives and is therefore labelled with the CE mark.
The Declaration of Conformity is available upon request, please contact the manufacturer.

Only use PAW accessories with the product.

2 Safety instructions

The installation and commissioning as well as the connection of electrical components require technical knowledge commensurate with a recognised vocational qualification as a fitter for plumbing, heating and air conditioning technology, or a profession requiring a comparable level of knowledge [specialist].

The following must be observed during installation and commissioning:

- relevant local and national regulations
- accident prevention regulations of the professional association
- instructions and safety instructions mentioned in these instructions

⚠ CAUTION



Personal injury and damage to property!

The product must only be used in heating circuits filled with heating water according to VDI 2035 / Ö-Norm H 5195-1.

► The product must **not** be used in drinking water applications.

NOTICE

Material damage due to mineral oils!

Mineral oil products cause lasting damage to seals made of EPDM, whereby the sealant properties are lost. We do not assume liability nor provide warranty for damage to property resulting from sealants damaged in this way.

► It is imperative to prevent the EPDM sealing elements from making contact with substances containing mineral oils.

► Use a silicone- or polyalkylene-based lubricant free of mineral oil such as Unisilikon L250L and Syntheso Glep 1 from Klüber or a silicone spray.

3 Product description

The HeatBloC® K35 is a preassembled group of fittings for heating circuits. The HeatBloC® is mounted directly onto a mounting plate or onto a distribution manifold. The distance between the pipe axis of the HeatBloC® and the wall must be at least 10 cm, as the connection C-3 is on the back side of the mixing valve.

Attention: To use the PAW piping sets (item no. 36092KS2 / KS3 / KS4), the centre distance, that is the distance to the wall, must be at least 150 mm!

3.1 Equipment

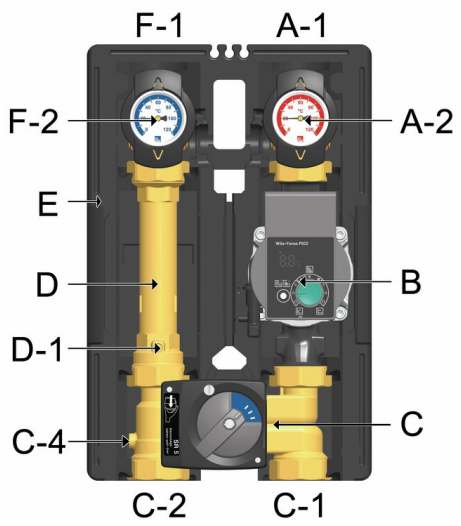



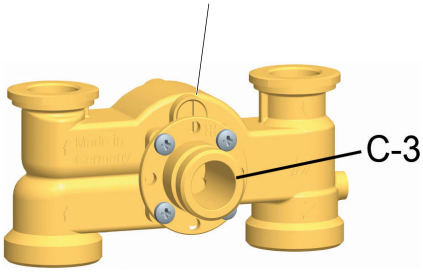

Rear view of mixing valve with flow on the right

A-1 Flow to the consumer circuit

A-2 All-metal thermometer with immersion sleeve, integrated in the ball valve (flow)

B Heating pump

C 3-temperature mixing valve

C-1 High-temperature flow from the buffer tank

C-2 Return to the buffer tank

C-3 Additional connection for the supply of the low-temperature flow on the back side of the mixing valve

C-4 Non-return valve, can be opened

D Return pipe

D-1 Check valve, can be opened

E Design insulation with optimised function

F-1 Return from the consumer circuit

F-2 All-metal thermometer with immersion sleeve, integrated in the ball valve (return)

3.2 Function

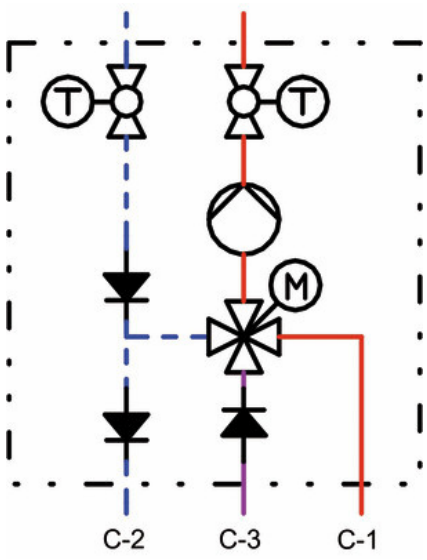

Application range:

- Heating systems with buffer tank and solar heating support
- Control of radiant floor heating and panel heating systems

K35 - 3-temperature mixing valve with additional connection for a second flow temperature

The 3-temperature mixing valve is used in combination with a buffer tank which can be heated either by a solar installation, a solid fuel boiler or a conventional boiler.

If the consumer only needs a low temperature level, such as for radiant panel heating systems, the 3-temperature mixing valve first takes the flow water from the intermediate part of the storage tank. Only when the temperature in this part is no longer sufficient, the hot water from the upper part of the tank is used.

By using two parts of the storage tank for two different flow temperatures, the energy from the buffer tank can be used more efficiently.

The return temperatures are low and the stratification in the buffer tank is maintained.

3.2.1 3-temperature mixing valve [specialist]

The 3-temperature mixing valve, driven by an electric actuator, adjusts the flow temperature of the consumer circuit to the required value by means of the flow sensor and the controller.

The 3-temperature mixing valve is equipped with a second flow connection (C-3) on the back side. This connection allows to withdraw water with a lower flow temperature from the intermediate part of the tank, e.g. of a buffer tank.

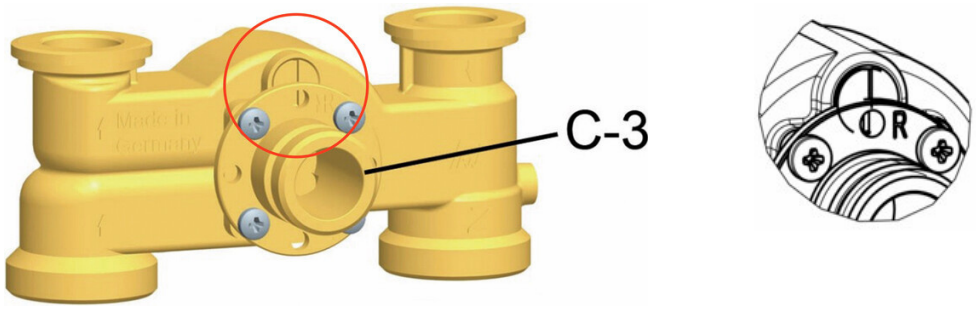

Rear view of mixing valve with flow on the right

For the K35: A check valve is integrated in this second flow connection to avoid unwanted circulation in the mixing valve. This check valve is designed for heating pumps with a maximum head of 7 m. If you want to use a more powerful pump, an additional check valve may be necessary in the feed line.

For the MC45: A non-return valve (D-1) prevents unwanted circulation.

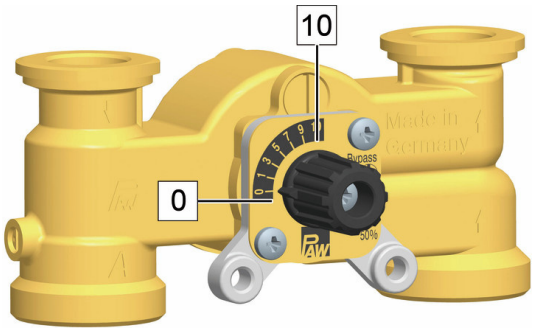

Example K35: Front view of mixing valve with flow on the right

Position 0-5:
The flow temperature is reached by mixing return water and water from the intermediate part of the tank.

Position 5:
100% supply from the intermediate part of the tank

Position 5-10:
The flow temperature is reached by mixing water from the intermediate part and the upper part of the tank.

3.2.2 Change of the flow line [specialist]

Dismounting of the mixing valve

1. Take off the thermometer handles (A-2, F-2) and remove the insulating front shell.
2. Take the group of fittings out of the insulating back shell.
3. Dismount the mixing valve (C).

Retrofitting of the mixing valve

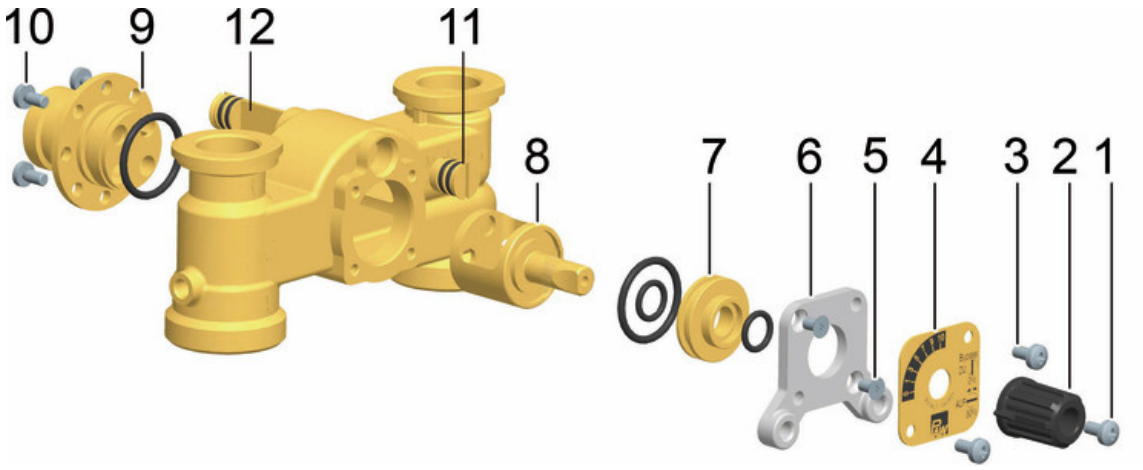

1. Loosen the screw (1).
2. Take off the rotary knob (2) from the cock rod.
3. Loosen the screws (3).
4. Remove the cover plate (4).
5. Loosen the two screws (5).
6. Remove the front plate (6).
7. Extract the sealing bush (7) with the cock plug (8) from the housing of the mixing valve.
8. Loosen the screws (10) on the back side of the mixing valve and take off the cover (9).
9. Pull the sealing plug (11) to the front by using pliers. Remove the flow-reducing plate (12) by pushing from front to back.
10. Turn the housing of the mixing valve by 180°.
11. Mount the flow-reducing plate (12) on the back side and the sealing plug (11) on the front side.

12. Mount the cover (9) on the back side of the mixing valve. The letters on the cover indicate the correct assembly position:

flow on the left: L points upwards

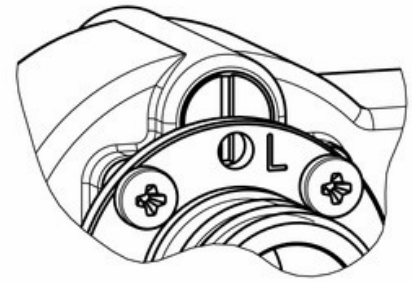

Assembly position for mixing valve with flow on the left

flow on the right: R points upwards



Assembly position for mixing valve with flow on the right

13. Fix the cover (9) by using the screws (10).
14. Insert the sealing bush (7) with the cock plug (8) into the channel of the mixing valve.
15. Screw down the front plate (6) using the screws (5).

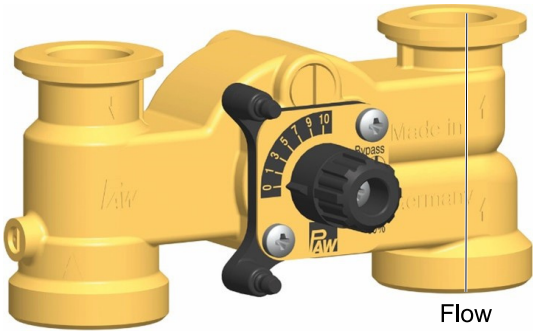

Mixing valve with flow on the right

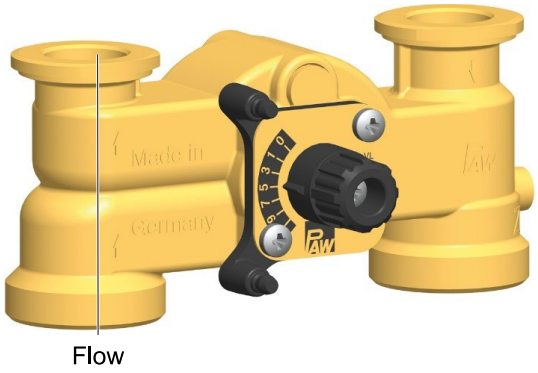

Mixing valve with flow on the left

16. Turn the cover plate (4) in such a way that the marking PAW is at the bottom and that the scale is positioned as shown in the figure above.
17. Fix the cover plate (4) by using the screws (3).
18. Put the rotary knob (2) onto the cock rod.
19. Fix the rotary knob (2) on the cock plug (8) by using the screw (1).

Retrofitting and commissioning of the heating circuit

1. Interchange the return pipe (D) and the flow pipe with the pump (B).

   Observe the flow direction of the pump!

   Turn the pump head such that the terminal box is directed to the top or to the centre of the fitting group.
2. Dismount and interchange the ball valves.
3. Mount the HeatBloC® and connect it to the installation.
4. Check all union nuts before commissioning and firmly tighten them if necessary.
5. Mount the insulation only after a pressure test has been carried out. Finally, mount the thermometer handles (A-2, F-2).

3.2.3 Check valve and non-return valve [specialist]

The HeatBloC® is equipped with a check valve (D-1) in the return pipe and with a non-return valve (C-4) in the return of the mixing valve. The valves can be opened. An additional check valve is integrated in the connection C-3 (low-temperature flow). This check valve cannot be opened!

Operation

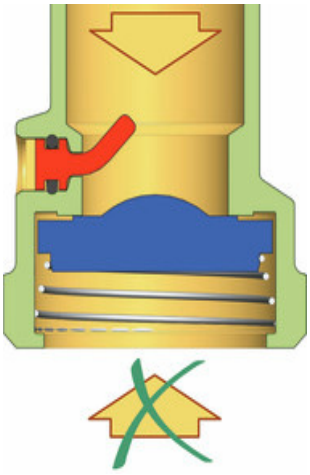

During operation, the markings must point to "Z".

- The check valve and the non-return valve are closed.
- Flow only in the direction of the arrow.

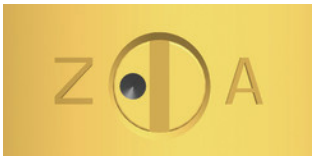

Filling, draining, venting

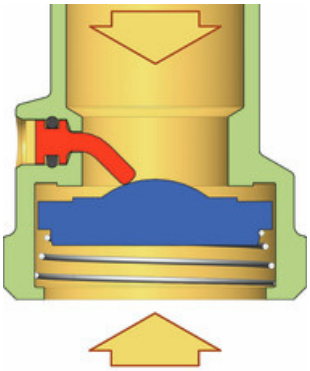

For filling, draining and venting, the markings must point to "A".

- The check valve and the non-return valve are open.
- Flow in both directions.



4 Mounting and installation [specialist]

The HeatBloC® can be mounted on a distribution manifold or on a wall bracket with mounting plate. The distribution manifold, the wall bracket and the mounting plate are not included in the scope of delivery.

NOTICE

Damage to property!

The installation site must be dry, stable, frost-proof and protected against ultraviolet radiation in order to prevent material damage of the installation.

4.1 Installation of the HeatBloC®

The distance between the pipe axis of the HeatBloC® and the wall must be at least 10 cm, as the connection C-3 is on the back side of the mixing valve.

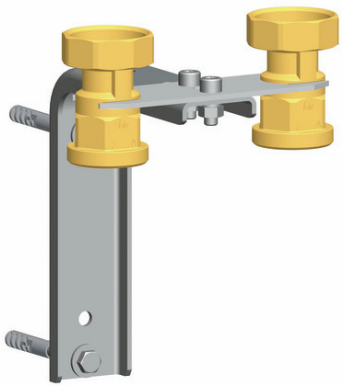

1. Mount the wall bracket with mounting plate.
2. Take off the thermometer handles and remove the insulating front shell of the HeatBloC®.
3. Unscrew the nuts on the lower connections of the HeatBloC® and take out the sealing rings.

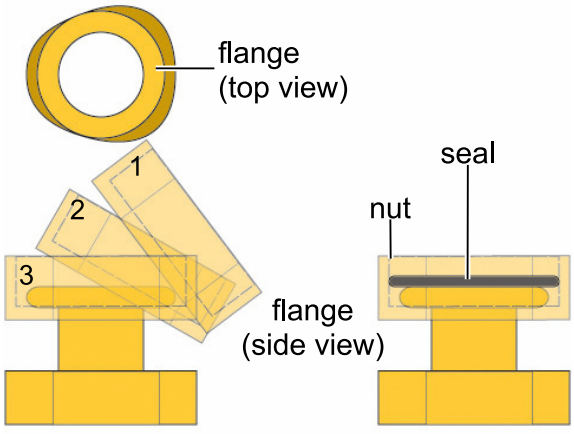

If a PAW modular distribution manifold or adapter fitting is used:

4. Put the two nuts over the flanges.
5. Insert the sealing rings into the nuts.
6. Put the HeatBloC® onto the two nuts.
7. Tighten the nuts. Make sure that the nuts do not get jammed and that the sealing rings do not slip.

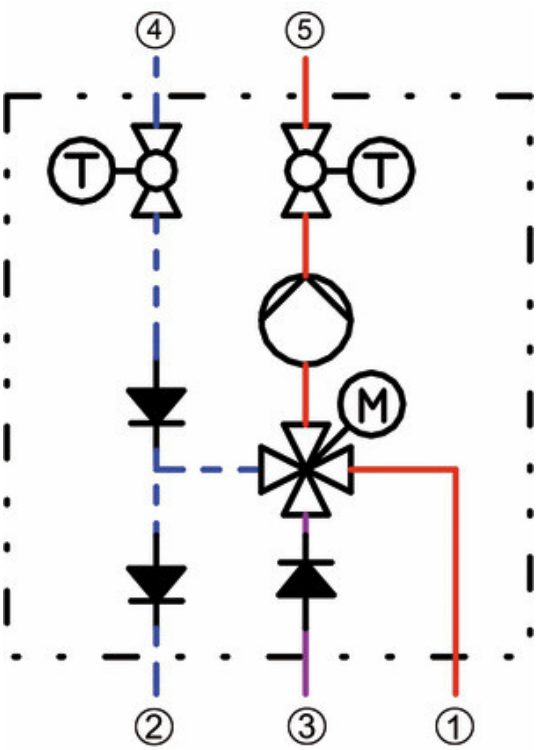

8. Connect the HeatBloC® to the installation by using the pipes. The installation to the piping must be carried out without any tension.

   ① - Flow from the upper part of the storage tank

   ② - Return to the storage tank

   ③ - Flow from the intermediate part of the storage tank (connection on the back of the mixing valve)

   ④ - Return from the consumer

   ⑤ - Flow to the consumer
9. Connect the pump.
10. Carry out a pressure test and check all thread connections.
11. Mount the insulating front shell and the thermometer handles.

Note:

If the K35 is mounted on a distribution manifold, the insulating back shell in the pipe axis of the connection on the back of the mixing valve ③ should be cut. The back shell of the distribution manifold is thus easier to mount.

4.2 Accessories: Actuator (optional)

The PAW actuator for weather-compensated control is available as an accessory.

For mixing valves with flow on the left, the scale must be turned by 180°.

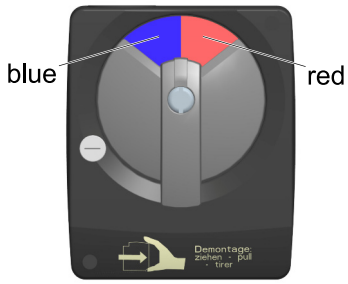

for mixing valve with flow on the right

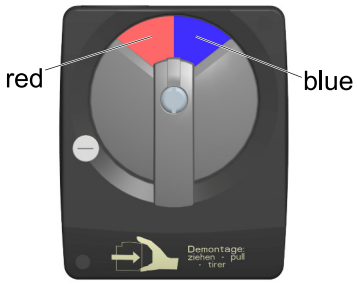

for mixing valve with flow on the left

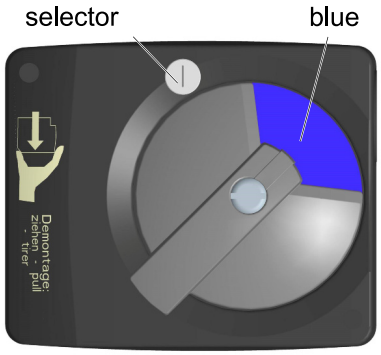

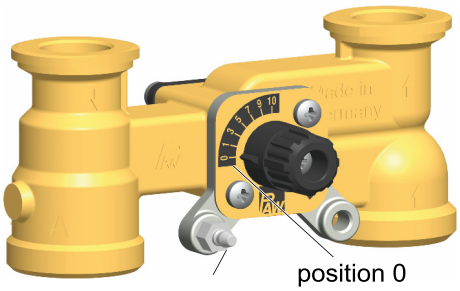



Assembly of the actuator - flow on the right:
If the PAW actuator has been purchased as an optional accessory, the mixing valve contains a metal plate. To mount the PAW actuator on the mixing valve, proceed as follows:

1. Turn the rotary knob of the mixing valve into **position 0**.
2. Set the actuator to manual mode by turning the selector switch.
3. Turn the rotary knob of the actuator to the left to the position shown opposite.
4. Mount the rotation lock / the stop bolt in the **left** opening of the metal plate. The actuator is fixed on a stop bolt.
5. Put the PAW actuator on the rotary knob of the mixing valve and mount the actuator on the stop bolts. The PAW actuator must be mounted in a horizontal position.
6. Set the actuator to automatic mode.

5 Scope of delivery [specialist]

NOTICE

Serial number

Complaints and requests / orders of spare parts will only be processed with information on the serial number! The serial number is placed on the return pipe of the product.

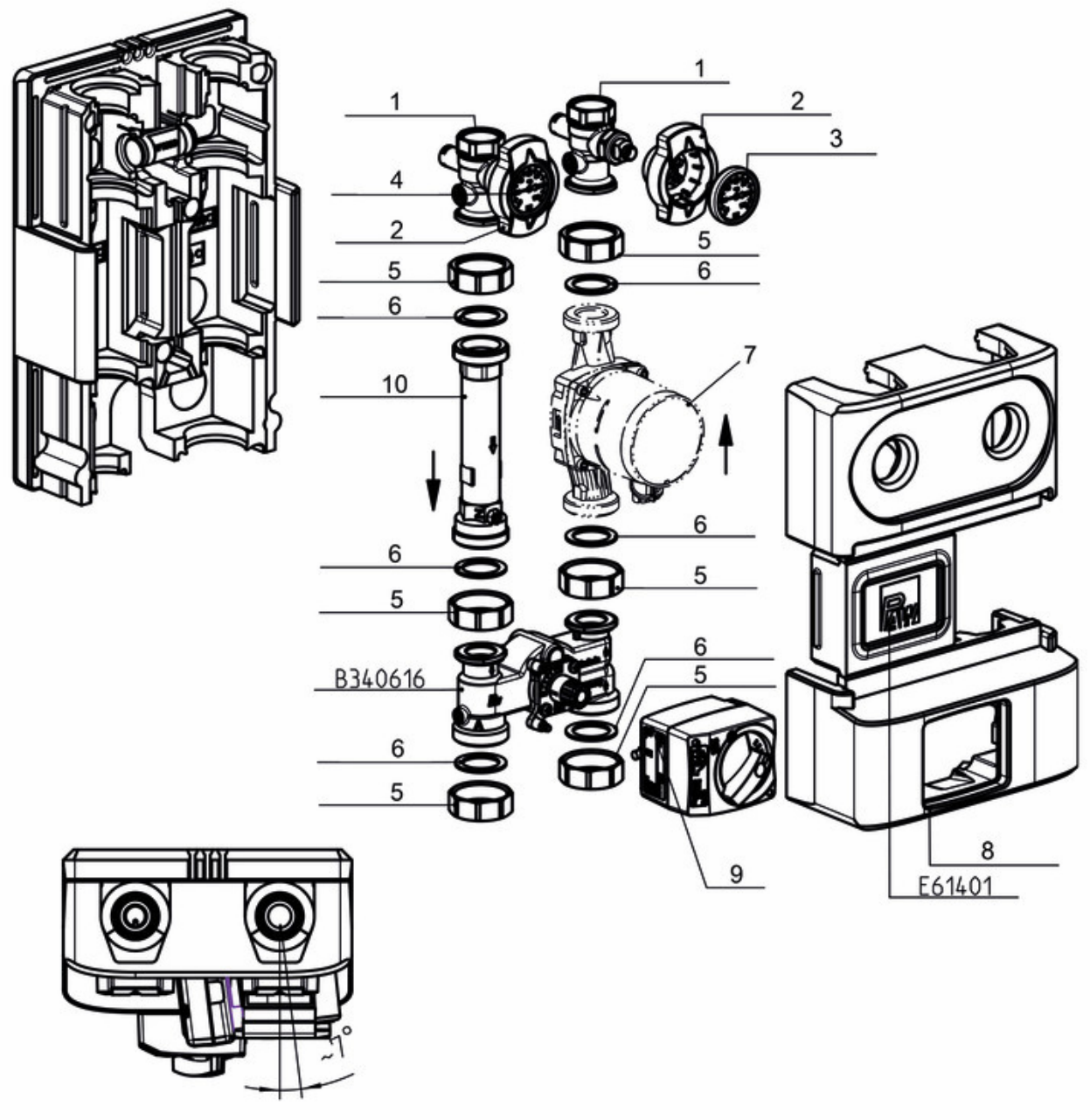

Position	Spare part	Item number
1	Thermometer ball valve DN 25, flange 1" x 1" int. thread	N00244
2	Thermometer handle for thermometer ball valve 1"	N00248
3	Dial thermometer, red scale, d = 50 mm, 0-120 °C	N00242
4	Dial thermometer, blue scale, d = 50 mm, 0-120 °C	N00243
5	Union nut G 1½"	N00269
6	Seal 1", for threaded connection 1½"	N00131
7	For the pump, see the table below.	
8	Insulation for HeatBloC® DN 25	N00016
9	Actuator 5 Nm, 230 V, 50 Hz	705001
10	Brass pipe DN 25, 2 x 1½" ext. thread, 180 mm, with check valve	N00018

Item no. heating circuit	Pump	Item no. pump	EEI
36093MWP6	Wilo Para SC 25/6-43	N00259	< 0.20
36093MWN06	Wilo Yonos PICO 25/1-6	N00214	< 0.20
36093MGM6	Grundfos UPM3 Auto 25-70	N00237	< 0.20
36093MGH6	Grundfos Alpha2.1 25-60	N00236	< 0.17

6 Technical data

HeatBloC® K35 DN 25 (1")	
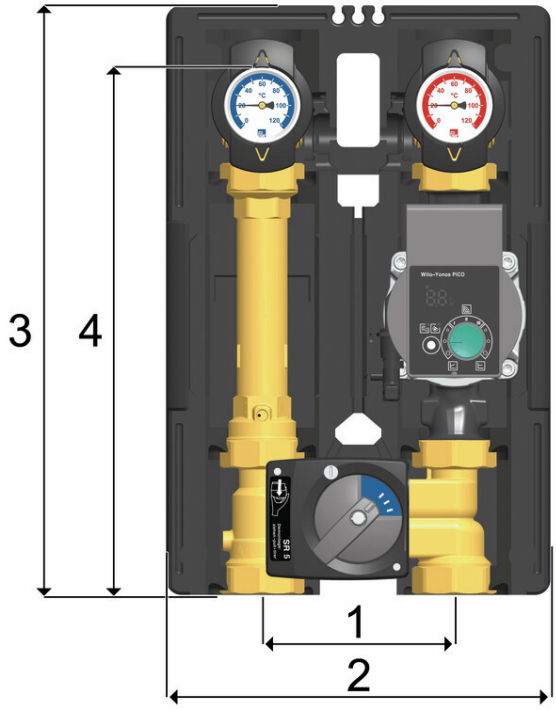	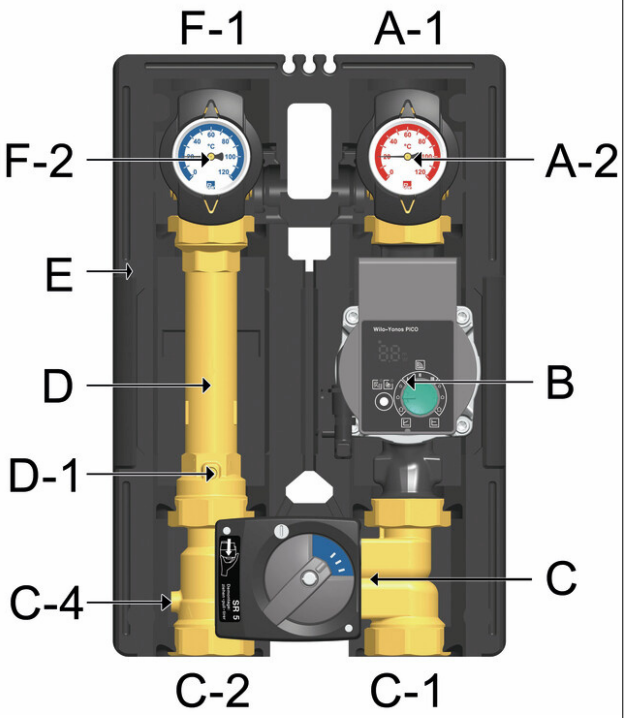
Dimensions	
Centre distance (1)	125 mm
Width insulation (2)	250 mm
Height insulation (3)	383 mm
Installation length (4)	340 mm
Connections	
Upper connections (A-1, F-1)	1" internal thread
Lower connections (C-1, C-2)	1½" external thread, flat sealing
Rear connection (C-3)	1" external thread
Operating data	
Max. pressure	6 bar
Maximum temperature	95 °C
Opening pressure check valve (D-1)	200 mm wc, can be opened
Opening pressure non-return valve (C-4)	50 mm wc, can be opened
Materials	
Valves and fittings	Brass
Seals	EPDM
Insulation	EPP

6.1 Pressure drop and pump characteristic curves

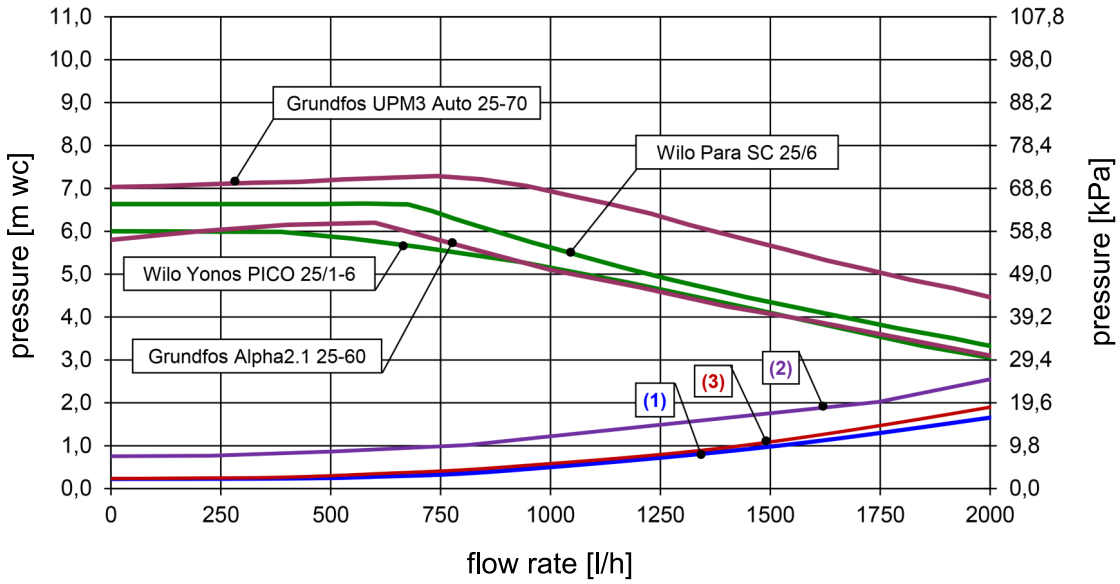

(1)	100% return, K_{VS}value = 5.1
(2)	100% low-temperature flow, K_{VS}value = 4.1
(3)	100% high-temperature flow, K_{VS}value = 4.7

7 Disposal

NOTICE	
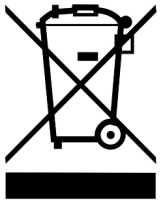	Electrical and electronic devices must not be disposed of in the household waste. For your return, there are free collection points for electrical appliances and, if necessary, additional points of acceptance for the reuse of the devices in your area. The addresses can be obtained from your city or communal administration. If the old electrical or electronic device contains personal data, you are responsible for deleting it before returning the device. Batteries and rechargeable batteries must be removed prior to the disposal of the product. Depending on the product equipment (partly with optional accessories), single components can also contain batteries and rechargeable batteries. Please observe the disposal symbols on the components.

NOTICE	
	**Disposal of transport and packaging materials** The packaging materials are made of recyclable materials and can be disposed of with recyclable materials.

Item no. 9936093x-mub-en

Translation of the original instructions

We reserve the right to make technical changes without notice!

Printed in Germany – Copyright by PAW GmbH & Co. KG

PAW GmbH & Co. KG
Böcklerstraße 11
31789 Hameln Germany
www.paw.eu
Phone: +49-5151-9856-0
Fax: +49-5151-9856-98