PAW GmbH & Co. KG
Böcklerstraße 11, 31789 Hameln, Germany
Phone: +49-5151-9856-0, Fax: +49-5151-9856-98
E-mail: info@paw.eu, Web: www.paw.eu

English

Installation and Operation Instructions
BoostBloC® - DN 25+



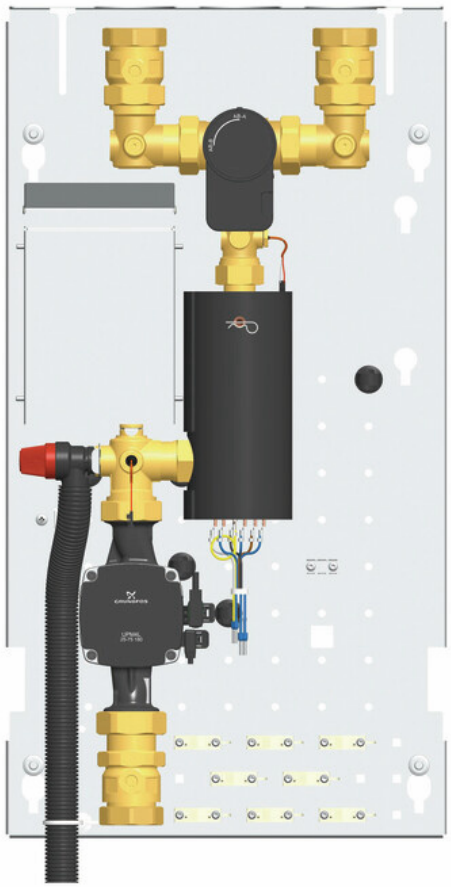

Table of Contents

1 General Information....3
1.1 Scope of these instructions....3
1.2 Designated use....3
1.3 Target group....4
2 Safety instructions....5
3 Product description....8
3.1 Equipment....9
3.2 Function....10
3.2.1 Pump [specialist]....11
3.2.2 Instantaneous water heater [specialist]....12
3.2.3 Connection of the instant water heater [specialist]....13
3.2.4 Circuit diagram for electrical connection [specialist]....14
3.2.5 Safety temperature limiter [specialist]....14
3.2.6 Actuator [specialist]....15
3.2.7 Safety valve [specialist]....15
4 Mounting and installation [specialist]....16
4.1 Preparing for installation [specialist]....17
4.2 Installation and commissioning of the BoostBloC® [specialist]....18
4.3 Electrical connection [specialist]....20
4.4 Mounting the cover [specialist]....22
5 Cleaning / maintenance....24
6 Decommissioning [specialist]....24
7 Scope of delivery [specialist]....25
7.1 Spare parts BoostBloC® DN 25+....25
8 Technical data....27
8.1 Dimensional drawing....29
8.2 Pressure drop and pump characteristic curves DN 25....29
9 Disposal....30
10 Notes....31

1 General Information



Carefully read these instructions before installation and commissioning.

Save these instructions in the vicinity of the installation for future reference.

1.1 Scope of these instructions

These instructions describe the installation, commissioning, functioning and the operation of a BoostBloC®.

For other components of the installation, such as the pump and the controller, please observe the instructions of the corresponding manufacturer. The chapters marked with [specialist] are intended for specialists only.

1.2 Designated use

The product may only be used in heating circuits taking into consideration the technical limit values indicated in these instructions.

The product is a wall-mounted, stationary heating device. It must be permanently integrated into the heating system and must not be connected via hose sets. The station is only intended for vertical installation; the direction of flow must be observed. The product must **not** be used in drinking water applications. The hardness of the heating water should not exceed max. 3 dH, any type of water additives are not allowed.

The product is not suitable for operation with phase cut. Observe the instructions for the components. Due to the electrical power, the leakage current may be higher than 3.5 mA, but it must not exceed 10 mA.

Improper usage of the product excludes any liability claims. Unauthorised modifications and the installation of unauthorised components may damage the station, compromise safety and result in the exclusion of any liability claims.

Only use original accessories and original spare parts with the product.

This product complies with the relevant directives and is therefore labelled with the CE mark.
The Declaration of Conformity is available upon request, please contact the manufacturer.

1.3 Target group

Heating specialist – persons with specialist knowledge in the following areas:

- heating technology, heating fluids
- building services engineering, building technology
- ventilation and air conditioning technology
- measurement technology
- heat pump technology
- environmental technology
- occupational safety, fire protection

Electrical engineering specialist – persons with specialised knowledge in the following areas:

- electrical engineering
- measurement technology
- occupational safety, fire protection

Trainees may only carry out the assigned tasks under professional supervision and guidance.

Depending on local laws, training, a degree or further education may be required.

Special notes:

- The product can be used by children aged 8 and above and by persons with reduced physical, sensory or mental capabilities or lack of experience and knowledge if they are supervised or have been instructed in the safe use of the device and understand the dangers involved.
- Children may not play with the product. Cleaning and user maintenance should not be carried out by children.

2 Safety instructions

The installation and commissioning as well as the connection of electrical components require technical knowledge commensurate with a recognised vocational qualification as a fitter for plumbing, heating and air conditioning technology, or a profession requiring a comparable level of knowledge [specialist].

The following must be observed during installation and commissioning:

- relevant local and national regulations
- accident prevention regulations of the professional association
- instructions and safety instructions mentioned in these instructions

⚠ WARNING



Risk to life and limb due to electric shock!

Incorrect installation and improper electrical connection can result in personal injury.

- ► Ensure that only a qualified electrician carries out the electrical installation and commissioning of the product.
- ► Connect the product to the mains power supply using a fixed connection with copper cables only.
- ► Provide a separation distance for each pole in the mains supply, with a contact opening width that corresponds to overvoltage category III for full separation. The separation distance is often at least 3 mm and may already be provided by circuit breakers, fuses, contactors or relays.

⚠ WARNING



Risk to life and limb due to electric shock!

- ► Prior to opening the device, de-energise the system.
- ► Check and secure the installation against accidental switching-on. This affects:
  - the load circuit of the instant water heater
  - the control circuit and
  - the heat pump.
- ► Only after completing all installation work and after **venting** the system, switch the power back on to the system. Even a short dry-running of the heat generator can damage it.

⚠ CAUTION



Risk of injury due to hot surfaces!

Surfaces of components can become very hot during operation.

Skin contact with hot surfaces causes severe skin burns.

- ► When carrying out any work nearby hot surfaces, in principle wear heat-resistant protective clothes and safety gloves.
- ► Before carrying out any work, make sure that all surfaces are cooled down to their ambient temperature.

⚠ CAUTION

Personal injury and damage to property!

Incomplete installation may compromise the safe use of the product. In their original condition, the electrical components of the product are not ignition sources (e.g. hot surfaces, sparking / arcing).

- ► Only operate the product when it is fully installed.
- ► The cover must remain closed during operation.

⚠ CAUTION



Personal injury and damage to property!

The product must only be used in heating circuits filled with heating water according to VDI 2035 / Ö-Norm H 5195-1.

- ► The product must **not** be used in drinking water applications.

NOTICE

Damage to property!

It is imperative to avoid dry operation of the instant water heater in order to prevent material damage of the installation and overheating.

- ► Make super to provide a sufficient flow rate of at least 500 l/min.
- ► When the flow is disturbed, the electric circuit must be immediately interrupted.

NOTICE

Cable routing!

During operation, parts of the device may become hotter than 70 °C.

- ► When laying the cables, ensure that there is sufficient distance from hot or sharp parts.
- ► Use the existing strain reliefs and cable guides.

NOTICE

Damage to electronic components!

The maximum input voltage of PWM signal of the pump is 24 V. Higher voltages will destroy the pump.

- ► Never connect the PWM cable to mains voltage.
- ► Please observe the separate instructions of the manufacturer.

NOTICE

Material damage due to mineral oils!

Mineral oil products cause lasting damage to seals made of EPDM, whereby the sealant properties are lost. We do not assume liability nor provide warranty for damage to property resulting from sealants damaged in this way.

- ► It is imperative to prevent the EPDM sealing elements from making contact with substances containing mineral oils.
- ► Use a silicone- or polyalkylene-based lubricant free of mineral oil such as Unisilikon L250L and Syntheso Glep 1 from Klüber or a silicone spray.

NOTICE

Personal protective equipment!

Personal protective equipment serves to protect individuals from hazards to their safety and health at work. Personal protective equipment (PPE) is recommended for assembling the station!

3 Product description

The BoostBloC® is a pre-assembled group of fittings for electric post-heating in heat pump applications.

The station has integrated ball valves and can be completely shut off for maintenance purposes.
It is controlled by an external controller (e.g. heat pump controller). The relays (230 V) integrated in the station are controlled via the post-heating request of the controller. The three individual switching stages allow the fixed outputs of 3000 W per switching stage to be combined as desired. A maximum output of 9000 W is available.

Please note the information on the integrated fuse in section *Connection of the instant water heater [specialist]*.

The pump and valve must also be controlled by the main controller. They do not switch on independently.

When the heating elements are activated, a continuous flow rate must be pumped through the heating system.

The station has an integrated safety temperature limiter designed to protect the station from further damage if a set temperature is exceeded.

NOTICE

Damage to property!
It is imperative to avoid dry operation of the instant water heater in order to prevent material damage of the installation and overheating.

- ► Make super to provide a sufficient flow rate of at least 500 l/min.
- ► When the flow is disturbed, the electric circuit must be immediately interrupted.

The station has a safety valve for releasing dangerous excess pressure during operation.

Depending on the controller and connection type, the pump can be connected simultaneously to the heat generator or separately. For an independent valve control of the integrated flow stratification, both a continuous phase and a switching phase are required.

3.1 Equipment

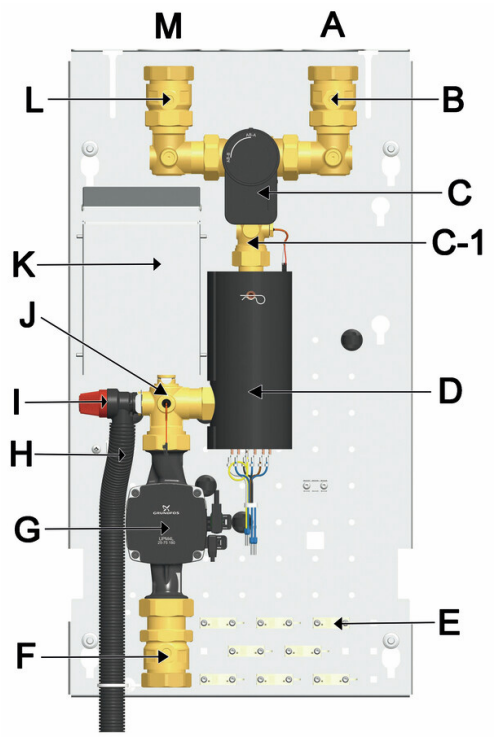

A Flow consumer 2 (230 V ON)

B Ball valve DN 25

C 3-way valve with actuator PS5-230-2P

C-1 Multifunctional piece with temperature sensor Pt1000

D Electric instantaneous water heater with insulation

E Mounting plate with ground straps and cable clamps

F Ball valve (flow from the heat pump)

G Heating pump

H Drain hose

I Safety valve

J Multifunction angle DN 32 with temperature sensor Pt1000

K Electronic unit with safety temperature limiter with temperature sensor

L Ball valve

M Flow consumer 1 (230 V OFF)

3.2 Function

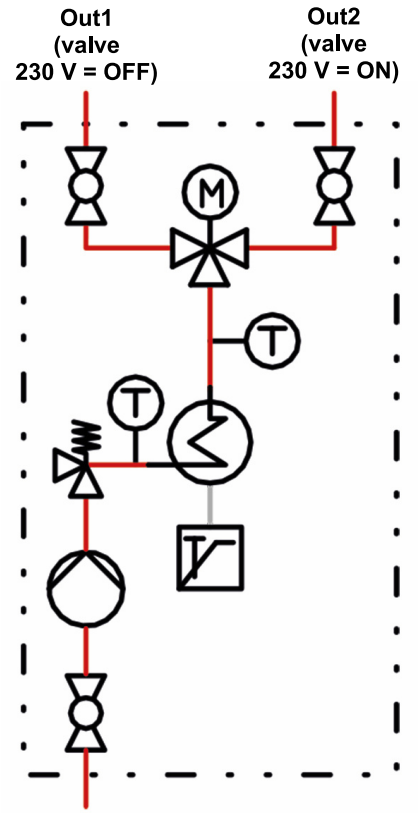

BoostBloC® with 3-way valve and instant water heater

The integrated 3-way valve can be used to switch the flow between, for example, two storage tanks or single-layer systems.

The switchover is performed by an actuator controlled by an external controller.

During the defrosting process of the heat pump or during maintenance works, the BoostBloC® can still provide thermal energy on demand.

To prevent the instantaneous water heater from overheating, a safety temperature limiter is installed which, in an emergency, disconnects the electrical connection and prevents automatic restarting.

3.2.1 Pump [specialist]

The BoostBloC® can be supplied with different pumps. When servicing, always replace the pump with the original pump.

In the standard case, the product has a continuously adjustable pump.

The speed setting is separate from the power supply; both are controlled via the main controller. The main controller sets the speed via a PWM signal and uses the heating pump characteristic curve for this purpose. This enables forced flow through the station in the event of a line break in the control system. With a PWM signal of 0% or when the PWM cable is disconnected, the pump runs at its maximum speed. With a 100% PWM signal, the pump does not run. For further information on operating the pump, please refer to the manufacturer's instructions.

The pump can be completely isolated. It can be replaced and maintained without draining the heating circuit system.

Isolation of the pump:

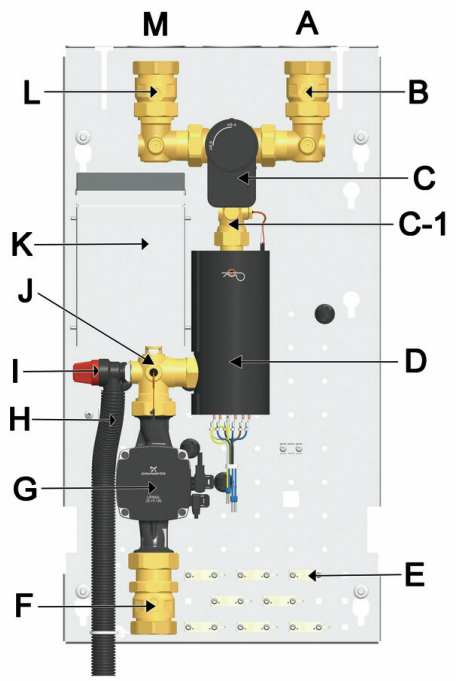

1. Disconnect the station, the heat pump and any external controllers from the power supply. Ensure that there is no voltage present during the work and that the system cannot start up.
2. Pull off the power and PWM cable of the pump (G).
3. Close the ball valves (B, F and L).
4. The pump is now completely shut off and can be removed.
5. Always use new seals when reinstalling after service or maintenance work.

3.2.2 Instantaneous water heater [specialist]

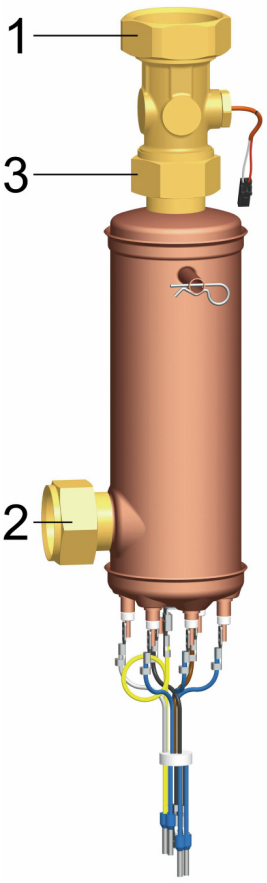

The instantaneous water heater is designed for connection to a 3-phase alternating current network and has three individual heating coils, each with a power rating of 3000 W.
Each heating coil has a separate neutral conductor connection that must be connected. In the event of an asymmetrical load, a zero point shift can lead to property damage in the event of a fault.
Before making the electrical connection, check that the connection cable is correctly dimensioned.
Only operate the station via a suitably dimensioned RCD-LS combination (residual current device, circuit breaker) and check that the protective measures are functioning correctly before commissioning.
Note: Only use the 4 mm thick seals directly on the instant water heater.
Note: For maintenance or servicing purposes, remove the instantaneous water heater by first loosening the union nut at position 1, then at position 2. Loosening the nut at position 3 while the unit is installed may damage the instantaneous water heater!

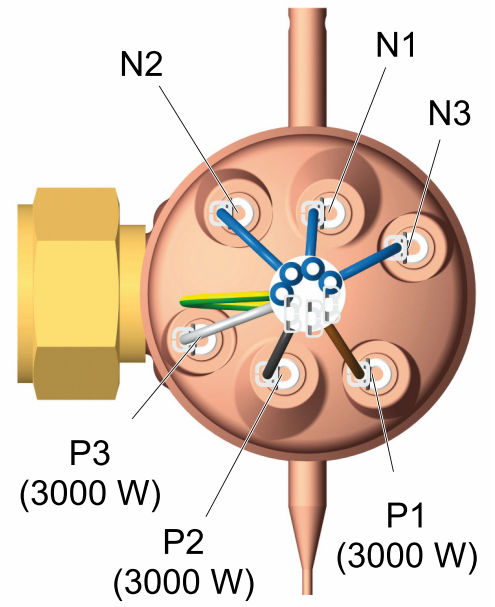

3.2.3 Connection of the instant water heater [specialist]

The cover provides contact and burn protection from the station components. The installation may only be put in operation when the cover is undamaged and thus the device is safe. Operating the station when the cover is removed is extremely dangerous.

⚠ WARNING



Risk to life and limb due to electric shock!

- ► Prior to opening the device, de-energise the system.
- ► Check and secure the installation against accidental switching-on. This affects:
  - the load circuit of the instant water heater
  - the control circuit and
  - the heat pump.
- ► Only after completing all installation work and after **venting** the system, switch the power back on to the system. Even a short dry-running of the heat generator can damage it.

NOTICE

Damage to property!

Even a short dry run can destroy the integrated electric heating elements.

The instantaneous water heater may only be heated electrically if it is completely filled with water and the minimum pressure is present in the system. This is the only way to ensure that the safety temperature limiter and the control system can function correctly.

- ► To prevent the safety temperature limiter from tripping, observe the operating parameters:
  - Min. flow rate = 500 l/h
  - Max. inlet temperature instantaneous water heater = 60 °C

3.2.4 Circuit diagram for electrical connection [specialist]

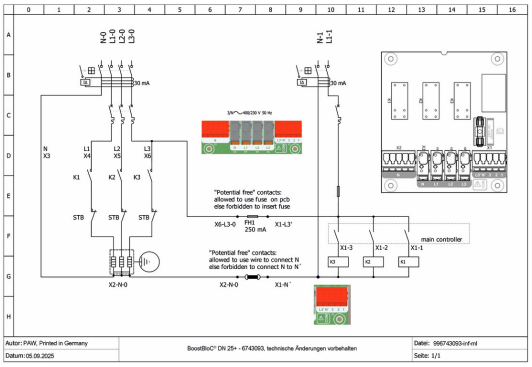

Please refer to the separately enclosed circuit diagram for the correct electrical connection of the controller to the relay board!

The relay board has a collective terminal for connecting the individual neutral conductors.

NOTICE

Damage to property!

The integrated relay board can provide a voltage for control via potential-free control contacts in the main control unit. If the main control unit already supplies 230 V:

- ► Do **not** insert this fuse and
- ► be sure to remove this fuse before commissioning.

3.2.5 Safety temperature limiter [specialist]

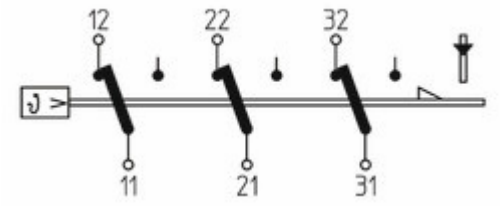

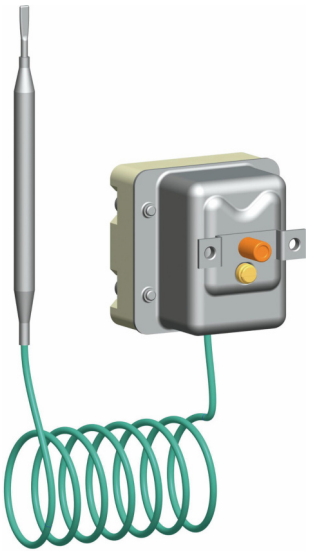

The safety temperature limiter is firmly set:
Switch-off temperature: 95 °C - ± 3 K
Switch-on temperature: < 80 °C
When the temperature is exceeded, the contacts open and are mechanically locked.
After dropping below the hysteresis the electrical contact must be reactivated again by pressing the reset button.
If the sensor or the sensor cable is defect, the contacts will be also deactivated. In this case, the safety temperature limiter must be replaced by an original spare part.
The safety temperature limiter is a safety-relevant component. Check that the sensor is correctly positioned in the instantaneous water heater and secure it with the spring clip to prevent it from slipping.

3.2.6 Actuator [specialist]

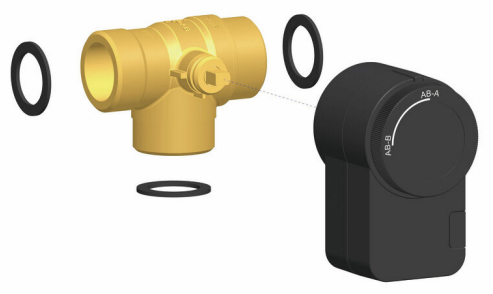

PS5-230-2P

For information on function, installation, deinstallation and electrical connection, please refer to the separate instructions for the actuator / valve.

3.2.7 Safety valve [specialist]



The safety valve can be shut off by valves and is designed only to protect the station. It does not protect the heating system, but must be taken into account when designing the system pressure!
Before installing / commissioning the station, check whether the use of the safety valve is permitted in your system. Only install the station if the use of a safety valve with the corresponding release pressure is permitted.

The respective release pressure of the installed safety valve is printed on the test cap.
When the release pressure is reached, the valve opens and allows any hot heating fluid to escape.
The drain hose is included in the scope of delivery and must be connected to the safety valve.
It is led downwards out of the station and must be secured with the integrated cable tie.
Observe the current installation specifications for the drain hose. It must be protected against condensate accumulation and freezing.
The end of the drain hose must be designed so that the drain is visible and cannot cause damage to property or personal injury.

4 Mounting and installation [specialist]

The BoostBloC® is a wall-hung station for vertical installation, the flow direction must be necessarily observed. The enclosed accessory bag contains optional mounting equipment. Only use mounting equipment that is suitable for your installation location.

NOTICE

Damage to property!

The installation site must be dry, stable, frost-proof and protected against ultraviolet radiation in order to prevent material damage of the installation.

NOTICE

Mounting position

To ensure a proper venting, the vertical mounting position (electrical connections downwards) is mandatory.

► Be sure to mount the product vertically so that the electrical connections of the instantaneous water heater point downwards.

NOTICE

Residual current device

The installation of a residual current device (RCD) with a rated differential tripping current not exceeding 30 mA is expressly recommended!

NOTICE

Protection against burns and contact

The cover provides contact and burn protection from the station components. The installation may only be put in operation when the cover is undamaged and thus the device is safe. Operating the station when the cover is removed is extremely dangerous.

4.1 Preparing for installation [specialist]

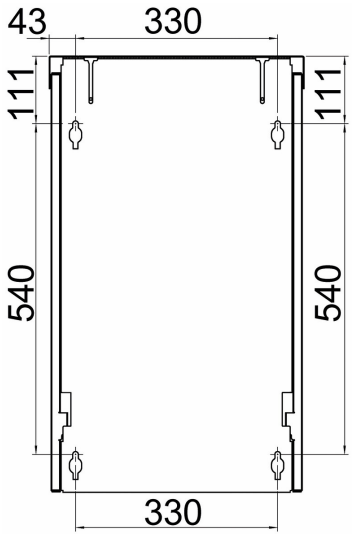

1. Determine the mounting location of the station near the heat pump. To ensure adequate ventilation and for maintenance purposes, leave a space of at least 200 mm above and below the station and 100 mm at the sides.
2. Copy the measures for the mounting holes, according to the illustrated drill pattern, to the wall.
3. Drill the holes and use suitable wall plugs and the screws provided.

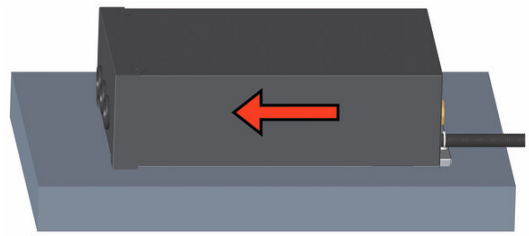

4. Unscrew the two screws on the hood of the horizontal station.
5. Push the cover towards the hood to release it.

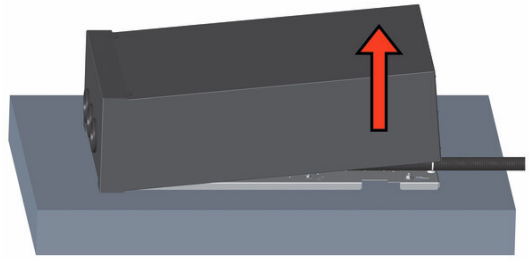

6. Lift the cover at the bottom.



7. Pull the cover diagonally upwards away from the hood.
8. Loosen the screws on the hood at the mounting plate and pull the hood off the station.

Next, the pipeline must be prepared. To do this, the openings provided for this purpose in the hood of the station must be prepared.

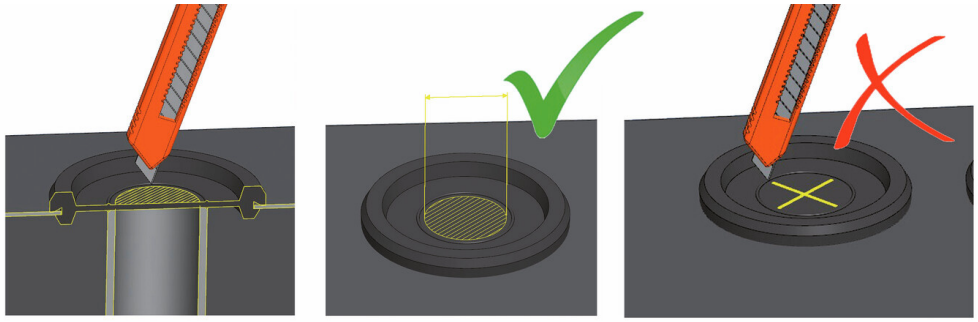

9. Hold the pipe to be used under the rubber grommet of the hood (left illustration).
10. Run the knife along the inside of the pipe from above. The hole will be smaller than the outer diameter of the pipe (middle illustration), thus ensuring a tight seal. Do not simply cut the opening (right illustration), as this will compromise the protection class.

4.2 Installation and commissioning of the BoostBloC® [specialist]

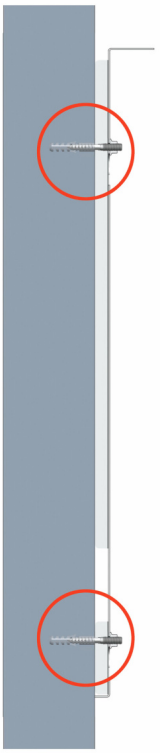

1. Hang the mounting plate with the valves and fittings onto the screws. Tighten the screws so that the plate is flush to the wall, see illustration on the left.
2. Place the hood above the station and slide it onto the pipes.
3. Now connect the station hydraulically. Once all pipes have been tightened securely, carry out a pressure test.

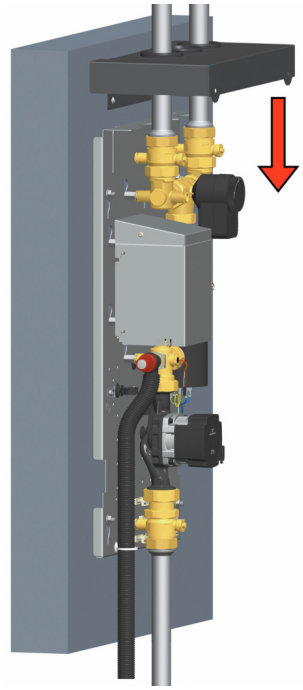

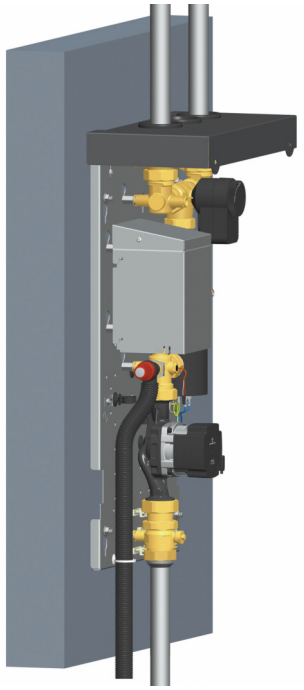

4. Place the hood on the mounting plate and screw it tight.
5. Lay the safety valve hose downwards and secure it there with the cable tie provided.

NOTICE

Vent the system!

- ► Vent the system after maintenance to prevent air from collecting in the instantaneous water heater.
- ► Flush the system thoroughly before commissioning to remove air from the pipes and components.

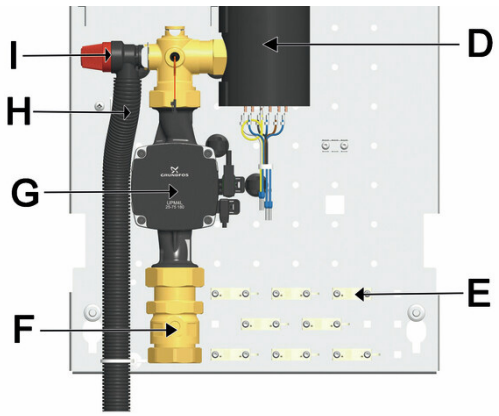

Once the hydraulic connection has been made, the electrical connection follows.

4.3 Electrical connection [specialist]

To connect an external controller to the relay board, clamp the controller connections under the strain reliefs (E). For the electrical connection, note the following two connection variants and circuit diagrams and select the appropriate diagram for your system. For further information and controller settings, please refer to the manufacturer's separate instructions.

There is a fuse holder for a micro fuse on the relay board.

Depending on the connection variant of the controller, this fuse **MUST** be inserted or it **MUST NOT** be inserted!

⚠ WARNING

If the controller provides a **direct 230 V control signal**, the power relays are supplied via the controller.

The relays are controlled by the individual control phases at "X1:3-2-1"; the corresponding neutral conductor is "X1:N".

The fuse must not be inserted!

No bridge may be installed between the neutral conductor terminals!

The fuse could cause a short circuit. The neutral conductor bridge would trigger the residual current devices.

► Do not insert the fuse **under any circumstances** !

Circuit diagram for **direct** 230 V control:

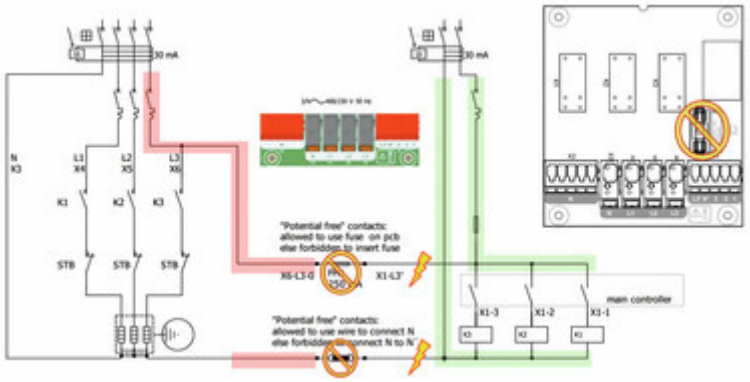

⚠ WARNING

If the controller has a **potential-free 230 V control**, the required voltage can be obtained via the relay board.

When the fuse is inserted, a fused excitation voltage from connection "L3´" is present at "L3". The fused excitation voltage is fed back to terminals "3-2-1" via the potential-free contacts of the main control.

- ► Install an external bridge between the neutral conductor terminals "X2:N" and "X1:N´".
- ► Oberserve the local electrical regulations!

Circuit diagram for **potential-free** 230 V control:

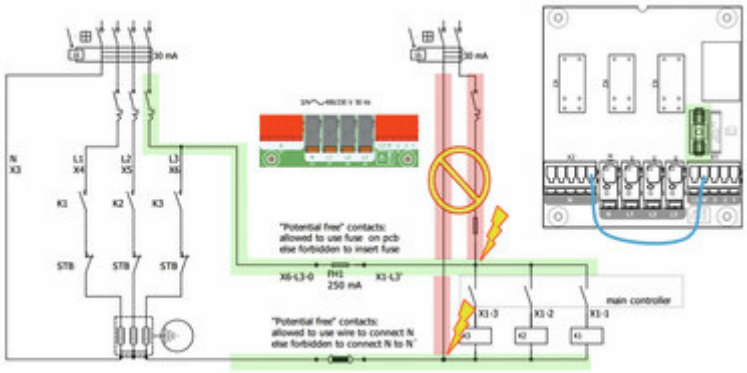

NOTICE

Cable routing!

During operation, parts of the device may become hotter than 70 °C.

- ► When laying the cables, ensure that there is sufficient distance from hot or sharp parts.
- ► Use the existing strain reliefs and cable guides.

NOTICE

Protection class I

- ► Ensure that the protective conductor is correctly connected to the mounting plate. The connection points are marked with the protective conductor symbol.
- ► Check and measure the equipotential bonding connections to the pipe system before commissioning the system.

4.4 Mounting the cover [specialist]

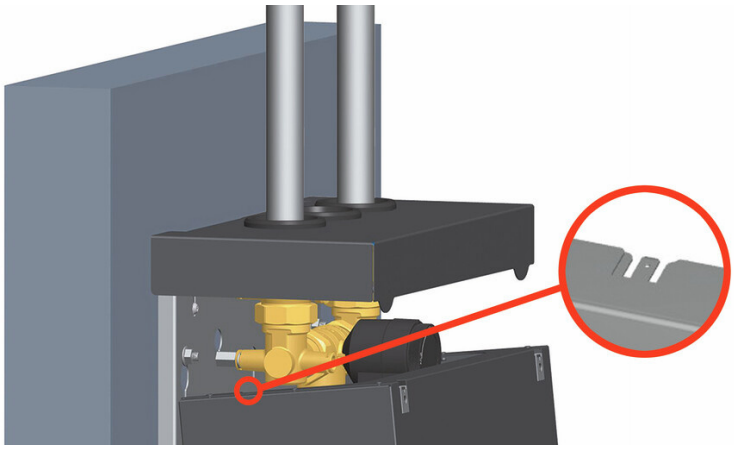

Once the electrical connection has been made, the cover must be mounted. To do this, first check whether the earth connection is connected to the station's mounting plate and then connect the cover to the mounting plate. To do this, plug the flat plug of the PE cable into one of the two tabs on the upper edge of the cover.

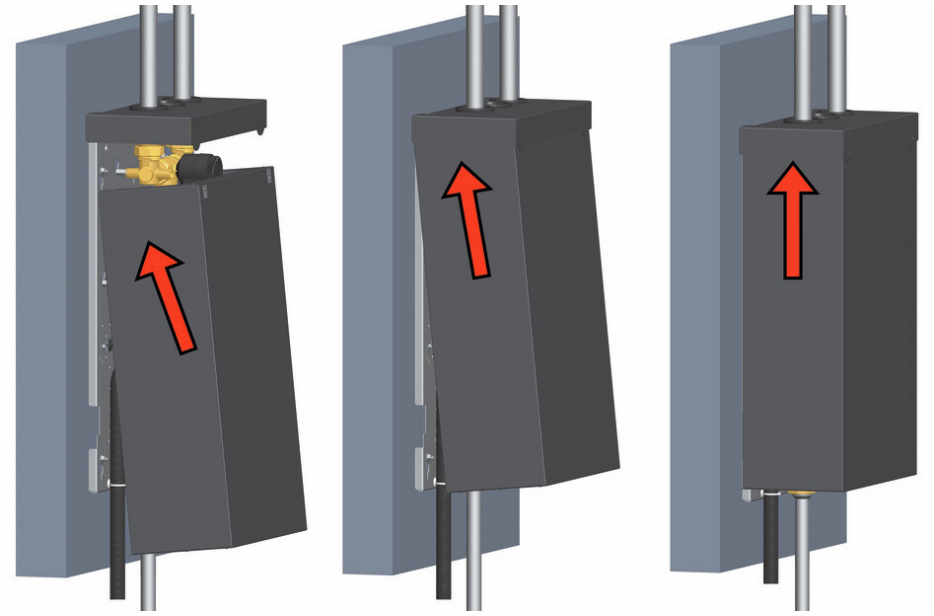

1. To mount the cover, place it at an angle on the mounting plate and slide it under the hood.

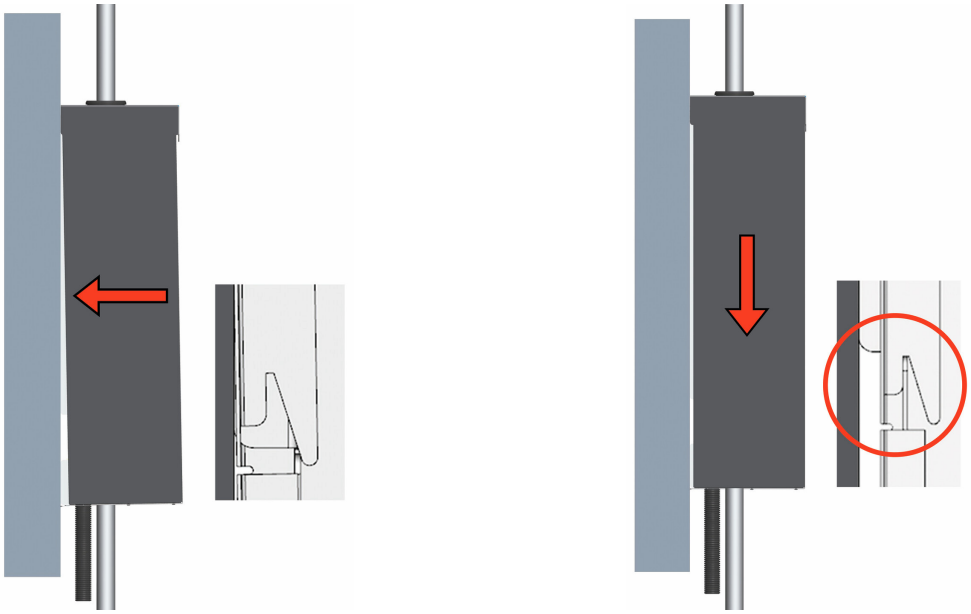

2. Swivel the cover towards the wall. The cover remains in contact with the hood during this process.
3. Allow the cover to slide downwards. The geometry of the hook causes the cover to slide forwards until it reaches the hood.

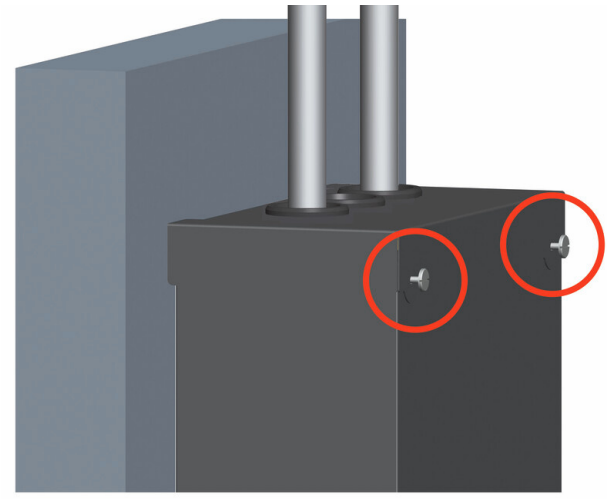

4. Screw the hood to the cover. The station is now ready for operation.

5 Cleaning / maintenance

Check the station regularly for obvious leaks by simply inspecting it visually. Carefully remove any dirt from the station at regular intervals. Use a dry, soft cloth for this purpose. Never use liquids or aggressive cleaning agents.

NOTICE

Maintenance by qualified personnel!

The station may only be opened by qualified personnel for maintenance purposes. Components inside the station may only be serviced by qualified personnel. A more extensive inspection is carried out during maintenance by qualified personnel.

⚠ WARNING



Risk to life and limb due to electric shock!

- ► Prior to opening the device, de-energise the system.
- ► Check and secure the installation against accidental switching-on. This affects:
  - the load circuit of the instant water heater
  - the control circuit and
  - the heat pump.
- ► Only after completing all installation work and after **venting** the system, switch the power back on to the system. Even a short dry-running of the heat generator can damage it.

6 Decommissioning [specialist]

In the event of obvious damage to the cover, cables or other components, the station must be decommissioned immediately. Proceed as follows:

- Contact qualified personnel for troubleshooting.
- Switch off the control system, if applicable, and disconnect the power supply by switching off the fuses for all circuits.

7 Scope of delivery [specialist]

NOTICE

Serial number

Complaints and requests/orders of spare parts will only be processed with information on the serial number!

The serial number is placed on the support sheet of the station.

7.1 Spare parts BoostBloC® DN 25+

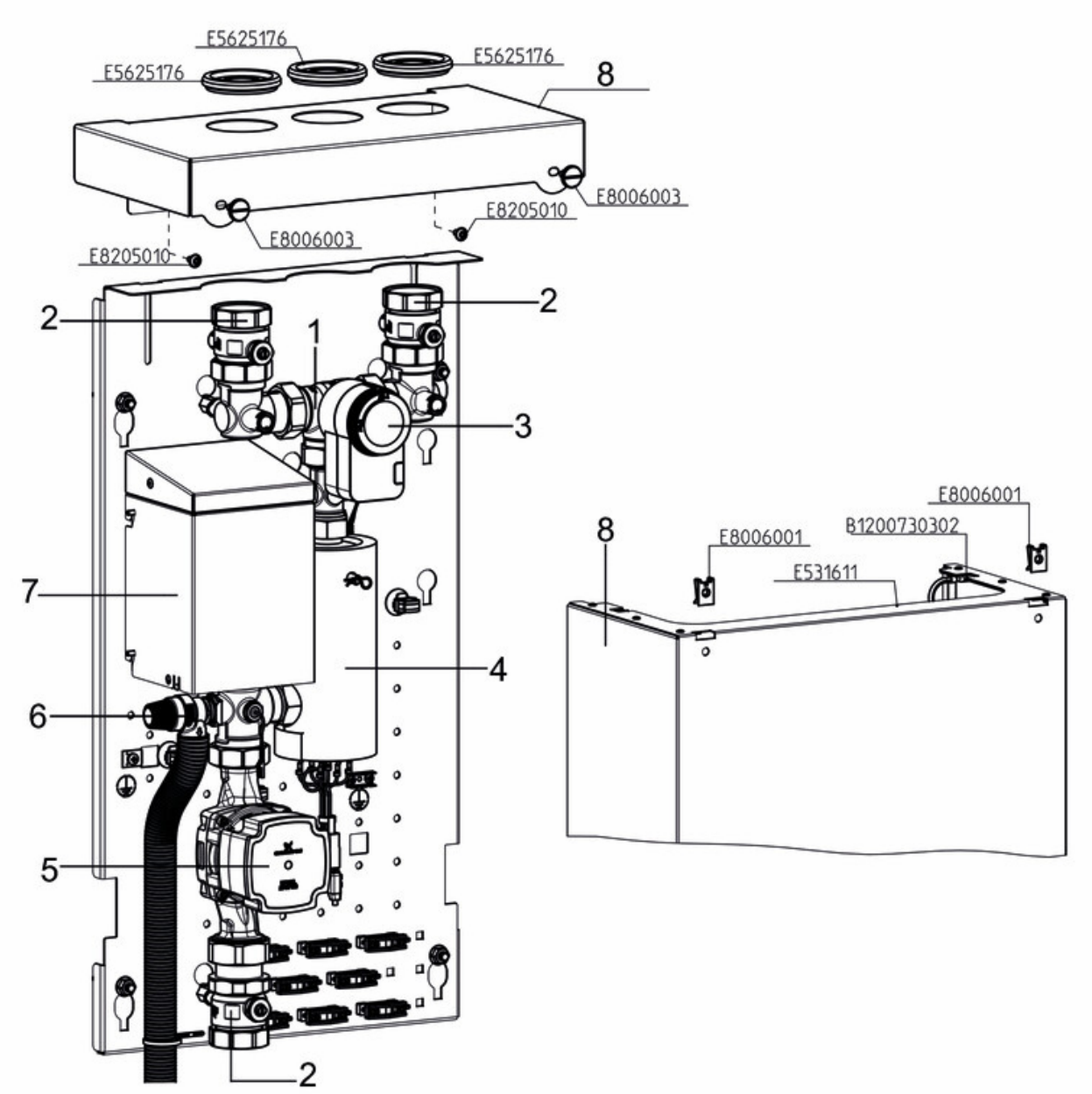

Position	Spare part	Item number
1	3-way switch valve DN 25, 3x 1¼" ext. thread	N00681
2	Ball valve DN 25, 1½" ext. thread x 1½" union nut, snap-in assembly	N00684
3	Actuator PS5-230-2P, 230 V, 5 Nm, 13 s / 90°, snap-in mechanism, 2-point control	N00599
4	Instantaneous water heater 9000 W, 3000-3000-3000 W, 230 V, 3 N, 50 Hz, 2x 1'' union nut, 7x H07V2-K2.5 mm2	N00683
5	Pump Grundfos UPM4L 25-75, 180 mm, 3 o'clock, 1½" ext. thread, PWM-A	N00634
6	Safety valve, with diaphragm, 4 bar, pluggable	N00680
7	Safety temperature limiter, 95 °C, 3 pins, 20 A, 400 V, relay board 3x13 A	N00679
8	Cover BoostBloC® DN 25+, 685 x 410 x 209 mm, black-grey	N00682
	Hood BoostBloC® DN 25+, 416 x 197 mm, black-grey	
no pos.	Seal 44.0 x 32.0 x 2.0, 1", for thread connection 1½", EPDM,10 pieces	N00131
no pos.	Seal 38.0 x 27.0 x 2.0, ¾", for thread connection 1¼", EPDM, 3 pieces	N00636

8 Technical data

BoostBloC®	DN 25+ (1")	
Dimensions		
Width insulation	410 mm	
Total height	711 mm	
Depth insulation	213 mm	
Installation length (A, M / F)	660 mm	
Hydraulic connections		
Flow consumer 2 (230 V ON): A Flow consumer 1 (230 V OFF): M	1 ½" int. thread	
Flow from the heat pump F	1 ½" int. thread	
Electrical data		
Heating cartridge		
Electrical connection	230 V, 3N, 50 Hz	
Nominal output level 1-3	P_1 = 3,000 W P_2 = 3,000 W P_3 = 3,000 W	N_1 N_2 N_3
Control	3x relay (external control required)	
Cable cross-section	2.5 - 6 mm²	
Output, sheathed cable	stripped: 11 - 13 mm cross-section: 1.5 - 4 mm² flexible cross-section: 1.5 - 10 mm² rigid	
Control, sheathed cable	stripped: 9 - 11 mm cross-section: 0.5 - 2.5 mm² flexible cross-section: 0.5 - 4 mm² rigid	
Station	protection category: IP21 protection class: I	
Pump Grundfos UPM4L 25-75	180 mm, 3 o'clock, 1½" ext. thread, Power consumption: 230 VAC / 50 Hz; 0.58 A PWM interface with feedback signal for volume flow rate determination Connection line: 2.5 m, H03V2V2 3G0.75	
Actuator PS5-230-2P	2-point control, snap-in assembly Power consumption: 230 V / 50 Hz Current consumption: 5 VA Torque: max. 5 Nm, setting time: 13 s / 90° Connection line: 2.5 m, 3x 0.5 mm²	
Safety temperature limiter	Switch-off temperature: 95 °C ± 3 K Switch-on temperature: < 80 °C	

BoostBloC®	DN 25+ (1")
Materials	
Valves and fittings	thermometer ball valves: brass
Seals	AFM 34, EPDM
Cover	steel
Mounting plate	galvanised steel
Insulation	Armaflex
Operating data	
Pollution class	1
Max. installation height	2000 m
Max. pressure safety valve	Depending on station: 3 bar (0.3 MPa) 4 bar (0.4 MPa)
Max. inlet temperature	60 °C at 500 l/h
Max. operating temperature	75 °C (note safety temperature limiter)
Min. flow rate during heating operation	500 l/h
Temperature increase:	
V_{min} = 500 l/h	+ 3000 W => ~T_{inlet} + 5 K + 6000 W => ~T_{inlet} + 10 K + 9000 W => ~T_{inlet} + 15 K
V = 1000 l/h	+ 3000 W => ~T_{inlet} + 2.5 K + 6000 W => ~T_{inlet} + 5 K + 9000 W => ~T_{inlet} + 7.5 K
V = 1500 l/h	+ 3000 W => ~T_{inlet} + 1.5 K + 6000 W => ~T_{inlet} + 3.5 K + 9000 W => ~T_{inlet} + 5 K
Hardness of water	max. 3°dH, water additives not allowed
K_{VS} value [m^3/h]	8.5
Electrical power heating cartridge	9,000 W

8.1 Dimensional drawing

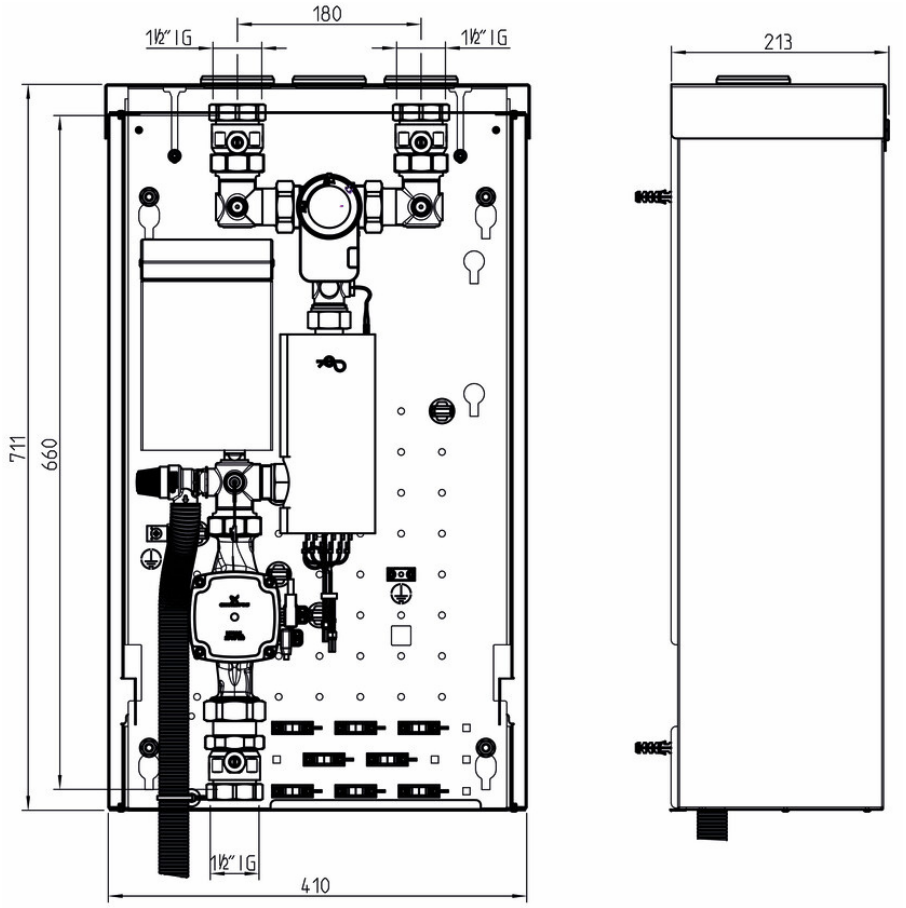

8.2 Pressure drop and pump characteristic curves DN 25

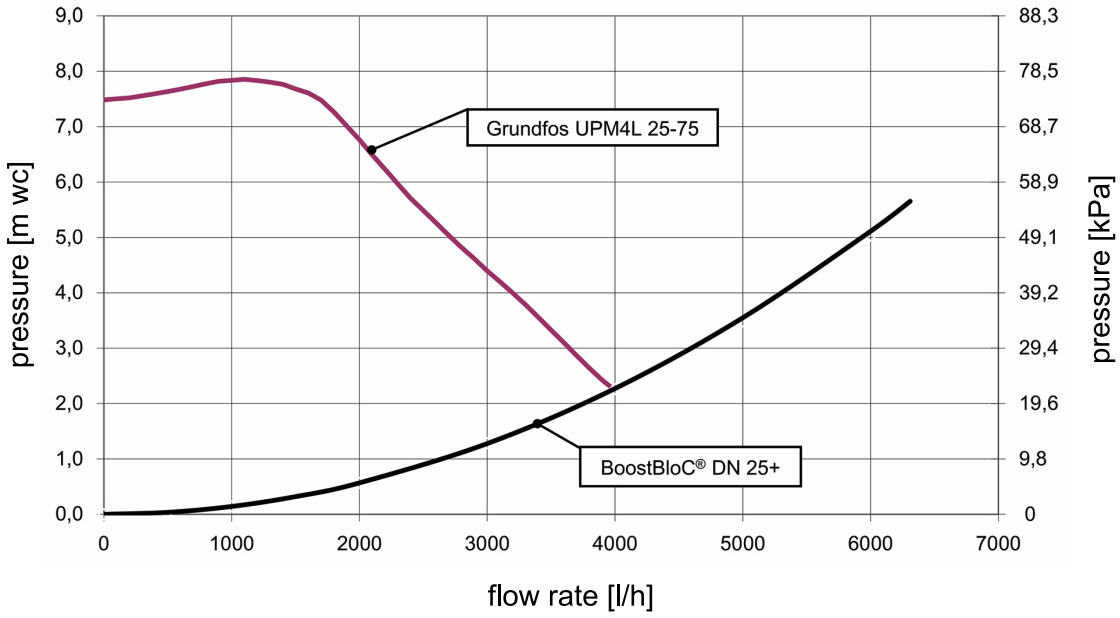

9 Disposal

NOTICE	
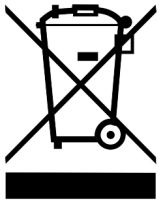	Electrical and electronic devices must not be disposed of in the household waste. For your return, there are free collection points for electrical appliances and, if necessary, additional points of acceptance for the reuse of the devices in your area. The addresses can be obtained from your city or communal administration. If the old electrical or electronic device contains personal data, you are responsible for deleting it before returning the device. Batteries and rechargeable batteries must be removed prior to the disposal of the product. Depending on the product equipment (partly with optional accessories), single components can also contain batteries and rechargeable batteries. Please observe the disposal symbols on the components.

NOTICE	
	**Disposal of transport and packaging materials** The packaging materials are made of recyclable materials and can be disposed of with recyclable materials.

10 Notes

Item no. 996743093-mub-en
Translation of the original instructions
We reserve the right to make technical changes without notice!
Printed in Germany – Copyright by PAW GmbH & Co. KG

PAW GmbH & Co. KG
Böcklerstraße 11
31789 Hameln, Germany
www.paw.eu
Phone: +49-5151-9856-0
Fax: +49-5151-9856-98